INSTALLATION, OPERATION AND MAINTENANCE MANUAL

Radiant Infrared Electric Heater

ROBERTS GORDON®

MODELS	VOLTAGE	TOTAL POWER (W)	CURRENT(AMPS)
GGEL30240B	208/240	2250/3000	10.8/12.5
GGEL15120B	120	1500	12.5

FIRE/EXPLOSION HAZARD WARNING

NOT FOR USE IN HAZARDOUS OR EXPLOSIVE ATMOSPHERES

During operation, always ensure combustible materials are kept at a safe distance from the heater body and from the emitted radiant energy. This heater is not intended for use in hazardous areas where flammable vapours, gases, liquids or other combustibles are present. Failure to do so can result in personal injury/or property damage.

FOR INDOOR AND OUTDOOR COMMERCIAL AND RESIDENTIAL USE

ROBERTS GORDON LLC | 1250 WILLIAM STREET, BUFFALO, NY 14206 **| 1-716-852-4400**

STOP!

Once this product is installed, it cannot be returned. To qualify for return, the unit must include original packaging and all accessories.

Please confirm all accessories are present during first unboxing!

2X Wall Mount Brackets

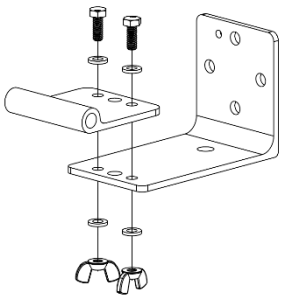

2X Suspension pole
(GGEL30240 ONLY)

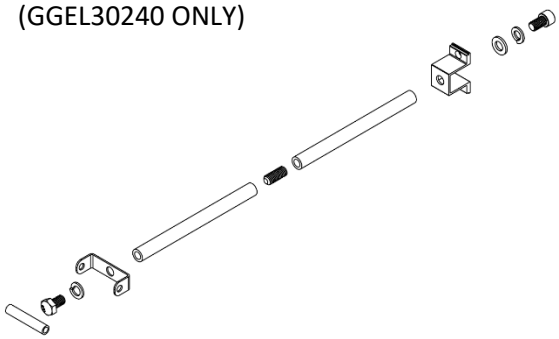

Remote

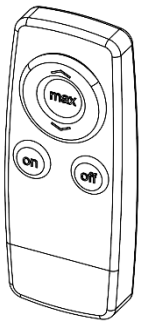

For Technical support, do not uninstall the heater!

We can't troubleshoot if the heater is removed! Warranty will not be provided without physical troubleshooting. For service support, contact your product dealer or distributor with the following information:

1. A copy of your sales receipt
2. A picture of the heater, showing distances to the ceiling and nearby walls
3. A picture of the rating label on the back of the heater
4. A brief description of the issue

TABLE OF CONTENTS

1 - SAFETY 4

2 - INSTALLATION INSTRUCTIONS 6

2.1 INSTALLATION CLEARANCE DISTANCES 6

2.1.1 1500w UNIT MINIMUM CLEARANCES 6

2.1.2 3000W UNIT MINIMUM CLEARANCES 7

MOUNTING ON ANGLED CEILINGS 7

2.2 ELECTRICAL INSTALLATION 7

2.3 WALL-MOUNTED INSTALLATION 8

2.4 CEILING MOUNTED INSTALLATION – 3000W UNIT ONLY! 8

2.5 ADJUSTING DIRECTIONAL POSITIONING 10

3 - OPERATING INSTRUCTIONS 10

3.1 PCB BYPASS MODE 11

3.2 REMOTE MODE 11

3.2.1 OPERATION OF THE REMOTE CONTROL 11

3.2.2 8-HOUR AUTO SHUTOFF 11

4 - MAINTENANCE 12

4.1 CLEANING 12

4.2 REPLACING THE EMITTER 13

5 - GROUNDING INSTRUCTIONS 14

6 - WARRANTY 15

WARNINGS

THIS ELECTRIC APPLIANCE PRODUCES INFRARED HEAT, AND FAILURE TO FOLLOW WARNINGS AND INSTRUCTIONS CAN CAUSE FIRE, ELECTRIC SHOCK, OR INJURY.

Heater must be installed by a certified electrician and installation must adhere to all local, state and national electric codes.

READ AND SAVE THESE INSTRUCTIONS

Please read this owner's manual carefully before using the unit and keep the manual for future reference. USE THIS HEATER ONLY AS DESCRIBED IN THIS MANUAL. ANY OTHER USE NOT RECOMMENDED BY THE MANUFACTURER MAY CAUSE FIRE, ELECTRIC SHOCK OR INJURY TO PERSONS

Notice: Changes or modifications not approved by the party responsible for compliance will void the user's authority to operate the equipment.

IMPORTANT INSTRUCTIONS

When using electrical appliances, basic precautions should always be followed to reduce the risk of fire, electric shock, and injury to persons, including the following outlined in section 1 – SAFETY. **Read all instructions before installing or using this heater. This heater must be used strictly according to these instructions.**

1 - SAFETY

WARNING: FIRE OR EXPLOSTION HAZARD

- **This product must be installed by a certified electrician and must adhere to all local, state, provincial and national electric codes (NEC/ CEC).**
- Failure to precisely follow safety warnings could result in serious injury or property damage.
- This heater has hot surfaces and arcing or sparking parts inside. Do not use the heater in areas where gasoline, paint or flammable vapors or liquids are used or stored.
- Check if the voltage indicated on the nameplate of the appliance corresponds to the local mains voltage before connecting the appliance.
- Specified minimum clearances from front, sides, bottom and back of unit must be met. Failure to meet clearance minimums can result in fire.
- **Heater is not to be recessed!**
- Keep combustible materials, such as furniture, pillows, bedding, papers, clothes, curtains, etc. at least 6 feet (1.8m) from the front of the heater and keep them away from the sides and rear.
- Do not direct the radiant part of the heater towards the ceiling.
- This heater is not to be installed or used in an area containing hazardous or flammable materials including but not limited to rags, fabrics, spray or aerosol cans, cleaning compounds, plastic containers, paper products, organic dusts, straw/hay, gasoline, kerosene, lighter fluid, etc.
- To prevent a possible fire, do not block air intakes or exhaust in any manner.
- Do not allow combustible materials to contact the heater due to wind or other environmental factors.
- Do not insert or allow foreign objects to enter any ventilation or exhaust opening as this may cause an electric shock or fire, or damage to the heater.
- Do not cover the heater in any manner, do not hang clothing on or near the heater.
- **Caution!** Do not use the heater together with another appliance connected to the same supply line or connected to the same breaker.
- This heater must be properly grounded.
- The power cord must not be left on or around the heater body.
- **WARNING!** This heater is not equipped with a thermostat or temperature control device. Do not install the heater in an enclosed space. If installed indoors, consult national electric code, Canadian electric code to determine if temperature control is required.
- Remove all packaging materials, including emitter anti vibration inserts prior to using the heater.
- Heater is not for use in bathrooms, laundry areas or other locations where unit could fall into water.
- **DO NOT MOUNT THE HEATER VERTICALLY!** Heater must be installed so the elements are horizontal. Failure to mount the unit horizontally will cause premature failure of the elements. **Mounting the heater vertically will void the warranty.**
- Do not use the heater if it has been dropped or damaged in any way. Ensure the emitter is not

cracked or chipped visually. Contact an authorized dealer for support.

- Do not install this product directly below a receptacle or wall socket outlet.
- Do not use the heater if the power cord is damaged. Contact an authorized servicer or qualified electrician to replace the cord prior to use.
- Unplug the appliance when it is not in use for long periods of time, or for cleaning and maintenance.
- The heater must be installed at level on a flat, stable surface, rigid enough to safely withstand the weight of the heater and the heater must not be covered by any flexible material, such as carpets, plastic or fabric.

CLEANING AND MAINTENANCE

- To avoid property damage, personal injury or death due to electrical shock DO NOT service the unit without turning the unit OFF and disconnecting the heater from the main power supply.
- The heater must be cleaned regularly! If the heater is installed in seaside conditions or a corrosive environment, the heater should be cleaned monthly. **Failure to clean the heater will cause premature failure as salt deposits on the emitter and reflector! Failure to clean the heater will void the warranty!**
- Before cleaning the unit or replacing the emitter, turn off the main power. Make sure the heater and/or the emitter is cool before handling.
- Service must be performed only by a qualified service technician.

OPERATION

- **Caution! Risk of scald injury!** This heater is hot when in use. To avoid burns, do not let bare skin touch hot surfaces.
- This appliance is not intended for use by persons (including children) with reduced physical, sensory or mental capabilities, or lack of experience and knowledge, unless they have been given supervision or instruction concerning use of the appliance by a person responsible for their safety.
- Never leave the heater unattended while it is operating.
- Do not use the heater without the aluminum grille in place.
- Do not operate any heater after it malfunctions. Disconnect power at service panel and have heater inspected by an electrician before reusing.
- Do not use the heater to light cigarettes or similar materials.
- Do not insert objects in heater openings. Electrical shock could result.
- To disconnect heater, turn controls to off, and turn off power to the heater circuit at the main disconnect panel.

SAVE THESE INSTRUCTIONS

2 - INSTALLATION INSTRUCTIONS

Heater installation must be carried out by qualified personnel in compliance with local National Codes (NEC) as well as any other applicable standards. Failure to comply with applicable requirements could result in personal injury and/or property damage. Wiring procedures and connections shall be made in accordance with national and local electrical codes having jurisdiction.

Infrared heaters produce radiant heat that warms people and objects, rather than the air around them. The heater can be wall or ceiling mounted and includes brackets which allow the user to direct the infrared heat where desired.

To reduce the risk of fire, do not store or use gasoline or other flammable vapors and liquids in the vicinity of the heater.

2.1 INSTALLATION CLEARANCE DISTANCES

⚠ DANGER FIRE HAZARD ⚠

The minimum clearances indicated on the nameplate and in the user manual must be observed at the time of installation. Clearances are based on a surface temperature of 194F (90°C). building materials with low heat tolerance may be subject to degradation at lower temperatures. It is the installer's responsibility to assure adjacent materials have sufficient heat tolerance. Mount heaters at least 36" apart.

WARNING! High temperatures are present, risk of fire! Keep electrical cords, drapery, furnishings and other combustibles at least 6' (1.8 m) from the front of the heater and away from the sides and rear.

2.1.1 1500w UNIT MINIMUM CLEARANCES

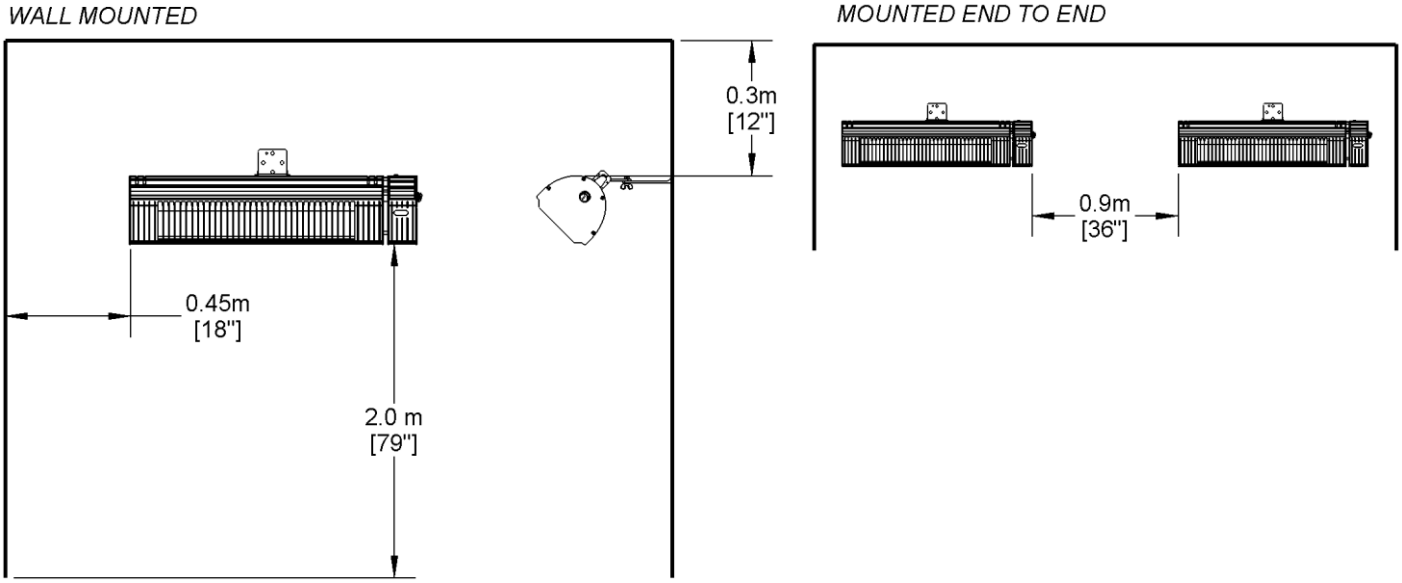

2.1.2 3000W UNIT MINIMUM CLEARANCES

WALL MOUNTED

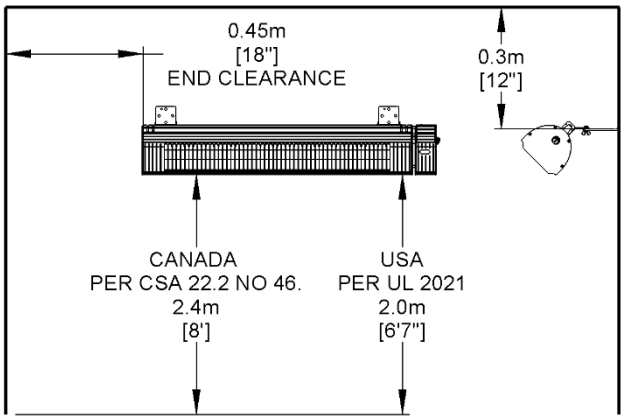

CEILING SUSPENDED

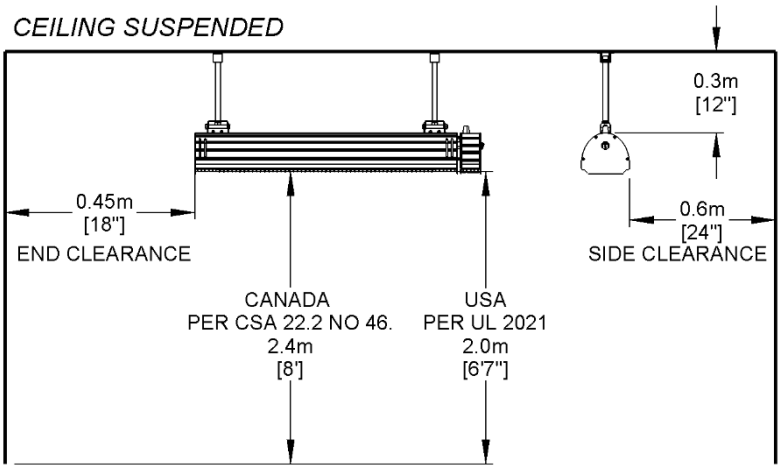

MOUNTING END TO END

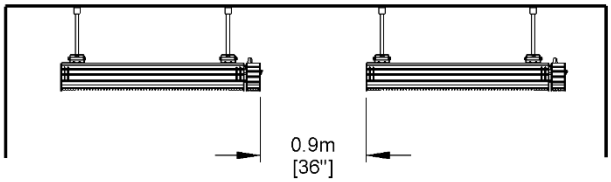

MOUNTING ON ANGLED CEILINGS

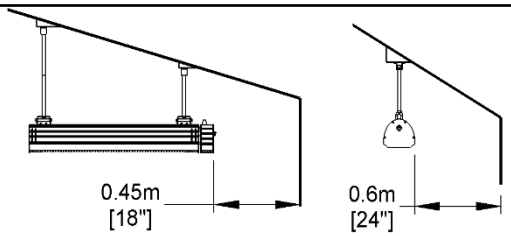

CORRECT INSTALLATION! Heaters installed parallel to the ground. Always follow side and ceiling clearances.

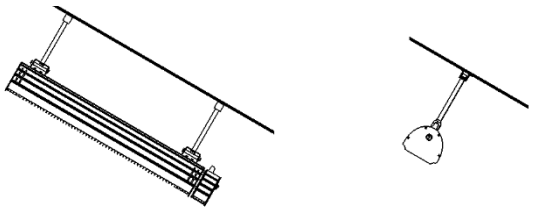

INCORRECT INSTALLATION! Do not mount heater on an angle! Installing on an angle will void heater warranty.

2.2 ELECTRICAL INSTALLATION

Safety Precautions

1. Each power supply circuit must be properly grounded.
2. Use a certified ground fault protection device for wet environment installations.
3. Use a proper electrical connection box
4. Supply voltage and frequency must correspond to the electrical rating indicated on unit's rating label
5. 3000W heaters are supplied with a grounding plug and must be installed per NEC/ local electrical code
6. 1500W heaters are supplied with a grounding plug and must be installed per NEC/ local electrical codes

2.3 WALL-MOUNTED INSTALLATION

HEATER MUST BE INSTALLED WITH BOTH MOUNTING BRACKETS PROVIDED IN THE BOX.

1. Take the heater out of the box and remove all protective foam inserts.

2. Select the installation location on the wall by identifying the studs or structural beams that will allow the heater to be securely attached.

WARNING: Ensure minimum clearances outlined in section 2.1 are met.

3. Securely fasten the L-shaped brackets to the mounting surface using both fixing holes in the short part of the bracket. **NOTE:** Wall bolts or anchors are not supplied. Select an appropriate size to provide adequate support for the weight of the unit and taking into consideration any wind load conditions.

CAUTION: If there is any question regarding security of the bolts and fixtures, contact a professional contractor.

4. Mount the heater to the brackets with the terminal box at the right side of the heater.

5. Adjust the heater to the desired directional angle, then fix in this position by tightening the fixing bolts on the brackets at the back of the heater.

6. Secure the electrical supply cable so it does not contact the heater body or obstruct the air vents. Follow local and national electrical code requirements.

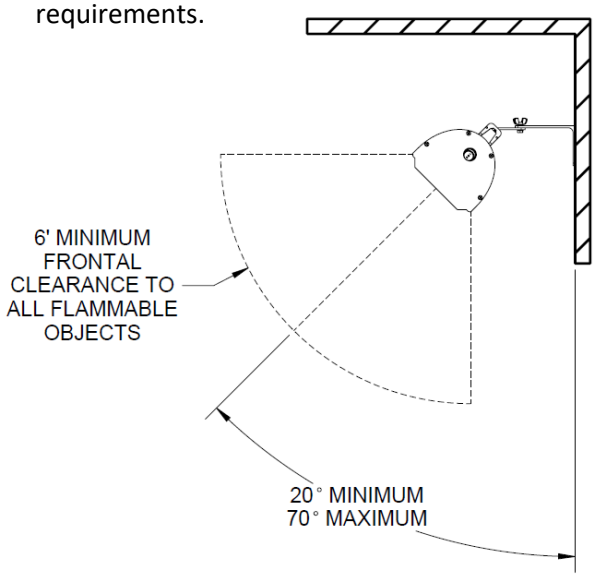

The angles of attachment are 20° to 70°, measured from the mounting wall.

2.4 CEILING MOUNTED INSTALLATION – 3000W UNIT ONLY!

⚠	**WARNING**	**Heater should be hung using rigid mounting brackets, the unit must not be able to swing in any direction under applied load from wind or persons. It is highly recommended that users install the heater with the ceiling mounting hardware provided.** **HEATER POSITION MUST MAINTAIN A MINIMUM CEILING CLEARANCE OF 0.3m (1')**

1. Assemble the ceiling mounting hardware as shown in the guide below. The socket head cap screw should be used on the ceiling bracket side, and the hexagon head cap screw should be used on the heater bracket side for clearance purposes. See Illustration.

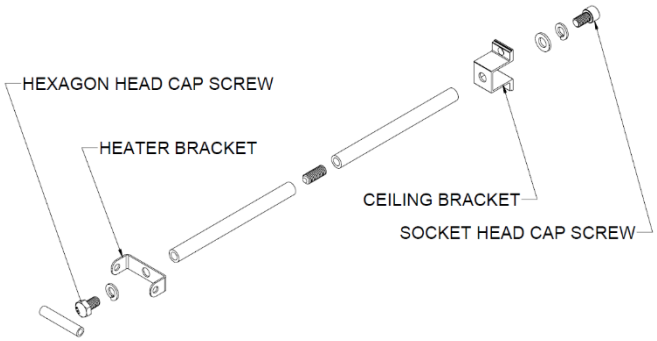

2. Remove the wall brackets, Install the ceiling suspension brackets.

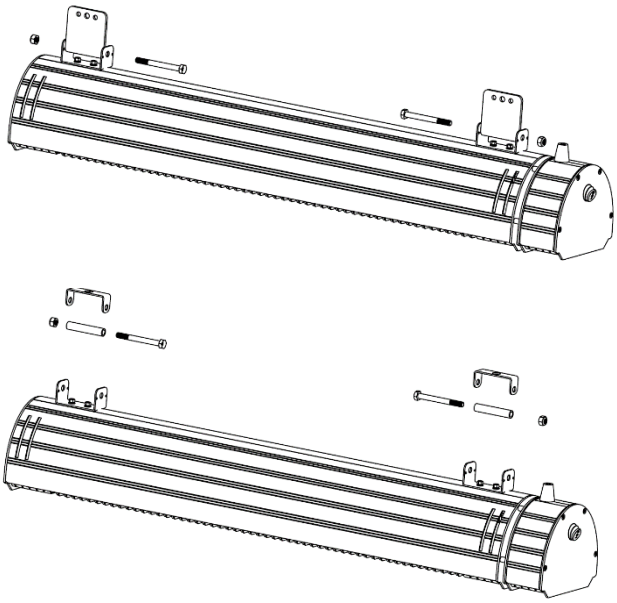

3. Secure the suspension brackets to heater to the using nuts and washers provided.

4. Select the installation location on the ceiling by identifying the studs or structural beams that will allow the heater to be securely attached. **NOTE:** ceiling bolts or anchors are not supplied. Select an appropriate size to provide adequate support for the weight of the unit (14.3lbs / 6.5Kg) and take into consideration any wind load conditions.

5. Attach the unit to the ceiling using the ceiling brackets and user selected bolts. An illustration of the bolt pattern dimensions is shown to the right.

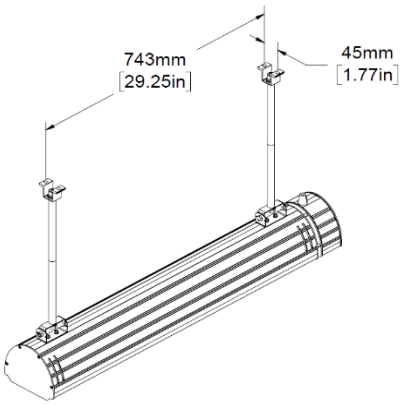

6. The heater can be hung vertically or pointed at a maximum angle of 45° from vertical.

NOTICE: NEVER direct the infrared heat produced by the appliance at an adjacent wall. ALWAYS MAINTAIN MIMIUM CLEARANCE FROM WALLS, FROM THE SIDES AND ENDS OF THE HEATER.

7. Secure the electrical supply cable so it does not contact with the heater body or cover the heater air vents.

2.5 ADJUSTING DIRECTIONAL POSITIONING

⚠	**WARNING**	**Never attempt to move or adjust the heater angle while it is running. Personal injury could result.**

1. Turn off the heaters electrical supply line from the main power supply.
2. Allow the heater to cool before adjusting the angle.
3. Loosen the fixing bolts on the brackets at the back of the heater; adjust the heater as desired, then re-tighten the fixing bolts.

Notice : The unit produces radiant heat that warms people and objects rather than the air around them. Install the heater at an angle which points the reflector at the target space. Do not point the heater at windows or vacant spaces, as the heat will not be delivered to the occupants.

INCORRECT

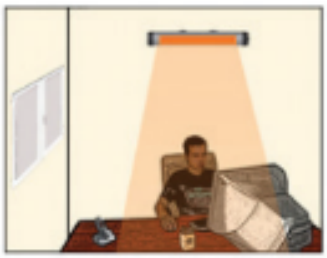

CORRECT

3 - OPERATING INSTRUCTIONS

Caution! The heater must be properly installed before it is used.

Caution! When the heater is not in use for extended periods of time, be sure to set the operating mode to the "OFF" position.

The heater has two modes of operation, these two modes can be selected using the button on the right side of the heater.

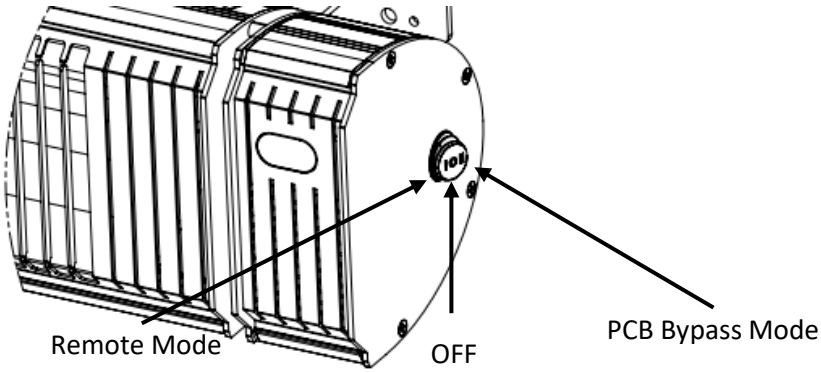

3.1 PCB BYPASS MODE

When the bypass mode is selected, the heater will operate at 100% of rated power OR may be controlled by other type of external control system. Installer or specifier is responsible for compatibility and safety of controls not included with this heater.

3.2 REMOTE MODE

The remote control must be pointed in the direction of the receiver on the heater body (located on the front face) and must be used within a maximum distance of 6 m.

In remote mode the heater has 6 power levels. The selected power level is displayed on the screen on front of the heater. The remote mode only works with the remote control supplied with the product. L0 represents standby while L6 represents the maximum heating level.

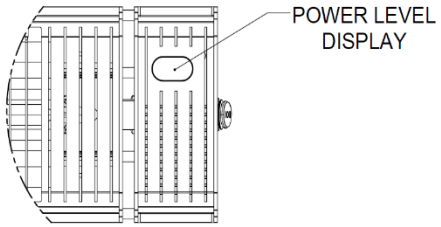

Display	*Description*	*Power setting*
L1	*Heating level 1*	*33%*
L2	*Heating level 2*	*50%*
L3	*Heating level 3*	*66%*
L4	*Heating level 4*	*80%*
L5	*Heating level 5*	*88%*
L6	*Heating level 6*	*100%*
L0	*Standby*	*0%*

3.2.1 OPERATION OF THE REMOTE CONTROL

Symbol	Description
^	Up one heating level
MAX	The heater goes directly to the highest heating level (short delay on start).
v	Down one heating level.
ON	Turns heater on, has soft-start function to increase lamp life. 4 seconds after the heater has been turned on, it will automatically switch to the last heating level used.
OFF	To switch the heater OFF: Press OFF. The heater will switch to Standby mode (the receiver indicator will light up).

Notice:

1. Use 2 pieces AAA, 1.5V batteries (not included) in the remote control. Remove the batteries when not in use for an extended period of time to increase battery life.
2. The heater can be still used normally in the event the remote control is misplaced, however it must be used in PCB bypass mode where the heater will run fully on. Contact your local authorized Dealer for remote replacement.
3. The remote-control function may not work if there is a barrier between the remote control and heater.
4. Replace the batteries as required to ensure correct remote functionality.

3.2.2 8-HOUR AUTO SHUTOFF

The Heater is equipped with an 8-hour safety auto shutoff feature. After 8 hours, the heater will automatically shut off when the heater is being used with the remote. This prevents the heater from being operated when no person is present.

4 - MAINTENANCE

WARNINGS

1. Allow the heater and the emitter to cool down before handling.
2. Installation and maintenance must be performed by a qualified technician.
3. Turn off the power before beginning maintenance.
4. Do not attempt to service or repair the unit while it is running.
5. Should the heater be dropped or damaged or malfunction at any time, immediately turn off the main power source and do not use it until it has been examined by an authorized service facility.
6. All other servicing should be performed by qualified service personnel.

Notice: This heater must be cleaned periodically to maintain optimal performance and appearance. Heaters should be cleaned seasonally and **monthly when installed in seaside environments where salt spray exists.** Failure to clean the heater reflector regularly can reduce the lifespan of the emitter and PCB board.

Notice: Do not touch the emitter with bare hands. Wearing soft cotton gloves is highly recommended. Fingerprints will burn into the carbon emitter during use and cause premature heater failure. If the emitter is inadvertently touched, or if it needs to be cleaned, carefully wipe it using rubbing alcohol or methylated spirits.

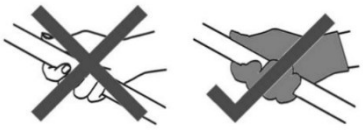

4.1 CLEANING

To remove dust or dirt on the reflector, follow these steps:

1. Turn the power to «OFF» and disconnect the heater from the main power supply.
2. Remove screws from the left side cover and slide the perforated front grille out of the heater body.
3. Carefully wipe the reflector with a soft, lint-free cloth. **Do not use abrasive cleaners or abrasive scrubbing brushes for cleaning!**
4. After cleaning, be sure to properly reinstall the heater grille.

4.2 REPLACING THE EMITTER

Contact your distributor for the correct replacement emitter, providing the model number and rating from the rating label. Using an incorrect replacement emitter can cause the heater to fail.

Notice: Read through the Emitter replacement procedure below before beginning the replacement. For easier replacement, remove the heater from the wall or ceiling.

1. **WARNING! TURN OFF THE POWER AND DISCONNECT THE HEATER FROM THE MAIN POWER SUPPLY. FAILURE TO DISCONNECT HEATER BEFORE REPLACING THE EMITTER COULD CAUSE ELECTRIC SHOCK OR DEATH!**
2. Turn OFF the power and disconnect from main power supply.
3. Be sure the heater and the emitter are cool: burns can result from touching hot components.
4. Remove screws from the left side of the heater fixture and remove the aluminum end cap. (keep these parts).

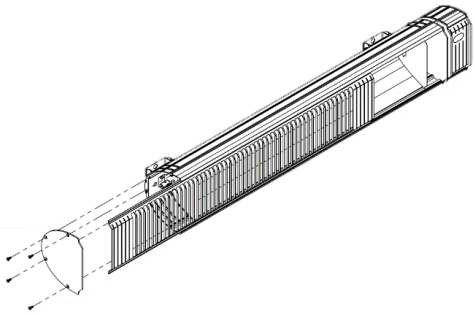

5. Carefully slide the protective grille out of the heater body to expose the emitter and the plastic sealing connectors.
6. Carefully unscrew the protective plastic cap and carefully slide the cap back cap to expose the wire/ metal connector system.
   Caution! Disconnect the metal locking connectors by squeezing the metal tab.

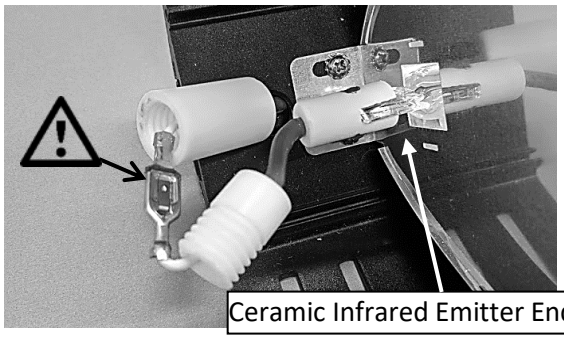

7. Bend the metal tabs to remove the small reflector shield sheet metal parts. Hold on to these pieces. This will allow you to slide the emitter into a bigger cavity to remove it from the reflector and heater body. Properly dispose of the broken emitter at your local recycling center.

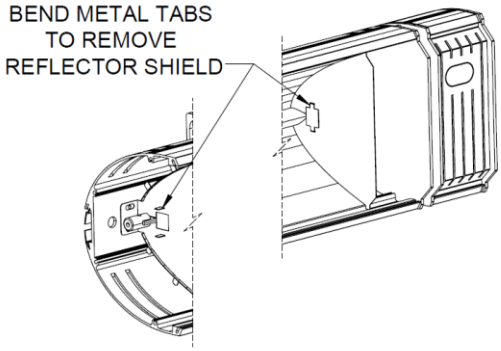

8. Hold the new emitter by the ceramic ends or wear clean dry gloves to prevent and position the new lamp inside the unit.
9. Insert the new emitter through the reflector openings. Insert the Reflector Shields and bend the tabs back into place. The Reflector Shields hold the emitter in the correct position during operation. It is important that they are re-installed during emitter replacement.
10. Connect the new emitter to the terminals of the heater; screw in the protective plastic caps

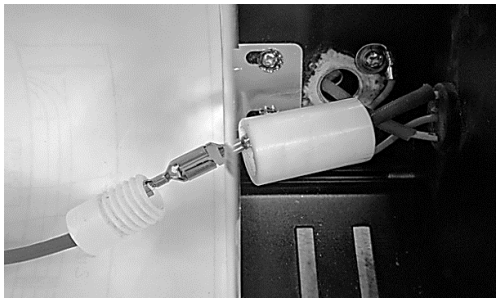

11. Carefully replace the protective aluminum grille and screw the protective end cap in place.

5 - GROUNDING INSTRUCTIONS

⚠ **WARNING**	**Connection to GFCI protected outlet is recommended For outdoor, exposed environments <u>and/or</u> as required by local, state and National Electrical Code (NEC) requirements.** **FAILURE TO USE A GFCI PROTECTED OUTLET COULD RESULT IN FIRE OR ELECTRIC SHOCK!**

FOR 120V HEATERS: This heater is for use on 120 volts. The cord has a plug as shown at A in figure 60.1. an adapter as shown at C is available for connecting three-blade grounding-type plugs to two-slot receptacles. The green grounding lug extending from the adapter must be connected to a permanent ground such as a properly grounded outlet box. The adapter should not be used if a three-slot grounded receptacle is available.

FOR 240 OR 208V HEATERS: This heater is for use on 240 Volts. The cord has a plug as shown in D in Figure 60.1. No adaptor is available for this for this blade configuration, and none should be used. The type of outlet is a 240 (OR 208) volt grounding outlet. When properly installed, it provides a ground connection through the cord to the heater to protect the operator from electric shock.

Figure 60.1
Grounding methods

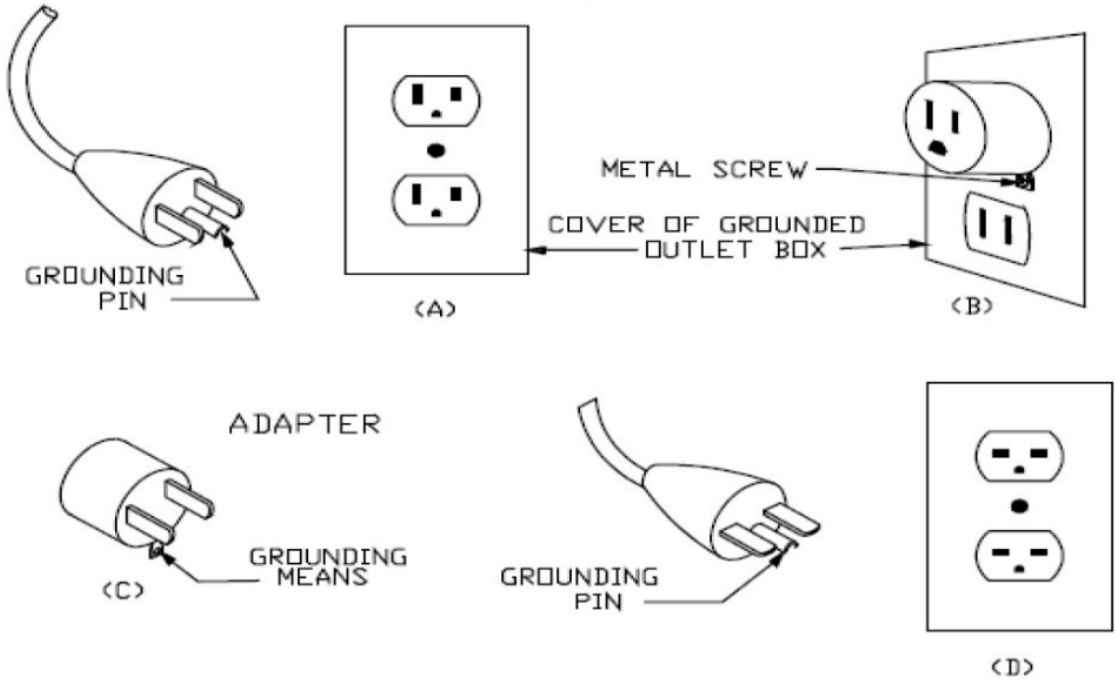

⚠ **WARNING**	**Modification of the supplied cord for hardwire purpose may only be completed by CERTIFIED ELECTRICIANS, and modification must satisfy local and NEC requirements. Incorrect modifications could result in electric shock or fire!**

6 - WARRANTY

THE ROBERTS GORDON® GORDONGLO™ ELITE ELECTRIC HEATER GGEL LIMITED WARRANTY
ROBERTS-GORDON LLC WILL PAY FOR:
Within 12 months from date of purchase by buyer or 18 months from date of shipment by Roberts-Gordon LLC (whichever occurs first), replacement parts will be provided free of charge for any part of the product which fails due to a manufacturing or material defect.
Roberts-Gordon LLC will require the part in question to be returned to the factory. Roberts-Gordon LLC will, at its sole discretion, repair or replace after determining the nature of the defect and disposition of part in question.
ROBERTS GORDON® Replacement Parts are warranted for a period of 12 months from date of shipment from Roberts-Gordon LLC or the remaining ROBERTS GORDON® GORDONGLO™ ELITE ELECTRIC HEATER GGEL warranty.

ROBERTS-GORDON LLC WILL NOT PAY FOR:
Service trips, service calls and labor charges.
Shipment of replacement parts.
Claims where the total price of the goods have not been paid.
Damage due to:

- Improper installation, operation or maintenance.
- Misuse, abuse, neglect, or modification of the ROBERTS GORDON® GORDONGLO™ ELITE ELECTRIC HEATER GGEL in any way.
- Use of the ROBERTS GORDON® GORDONGLO™ ELITE ELECTRIC HEATER GGEL for other than its intended purpose.
- Incorrect gas or electrical supply, accident, fire, floods, acts of God, war, terrorism, or other casualty.
- Improper service, use of replacement parts or accessories not specified by Roberts-Gordon.
- Failure to install or maintain the ROBERTS GORDON® GORDONGLO™ ELITE ELECTRIC HEATER GGEL as directed in the Installation, Operation and Service Manual.
- Relocation of the ROBERTS GORDON® GORDONGLO™ ELITE ELECTRIC HEATER GGEL after initial installation
- The use of the ROBERTS GORDON® GORDONGLO™ ELITE ELECTRIC HEATER GGEL in a corrosive atmosphere containing contaminants.
- The use of the ROBERTS GORDON® GORDONGLO™ ELITE ELECTRIC HEATER GGEL in the vicinity of a combustible or explosive material.
- Any defect in the ROBERTS GORDON® GORDONGLO™ ELITE ELECTRIC HEATER GGEL arising from a drawing, design, or specification supplied by or on behalf of the consumer.
- Damage incurred during shipment. Claim must be filed with carrier.

WARRANTY IS VOID IF:
The ROBERTS GORDON® GORDONGLO™ ELITE ELECTRIC HEATER GGEL is not installed by a contractor qualified in the installation and service of gas fired heating equipment.
You cannot prove original purchase date and required annual maintenance history.
The data plate and/or serial number are removed, defaced, modified or altered in any way.
The ownership of the ROBERTS GORDON® GORDONGLO™ ELITE ELECTRIC HEATER GGEL is moved or transferred. This warranty is nontransferable.
Roberts-Gordon LLC is not permitted to inspect the damaged equipment and/or component parts.

READ YOUR INSTALLATION, OPERATION AND SERVICE MANUAL
If you have questions about your equipment, contact your installing professional. Should you need Replacement Parts or have additional questions, call or write:

Roberts-Gordon LLC
1250 William Street
Buffalo, New York 14206
Telephone: +1.716.852.4400
Email: salesinfo@rg-inc.com
www.robertsgordon.com

Roberts-Gordon LLC's liability, and your exclusive remedy, under this warranty or any implied warranty (including the implied warranties of merchantability and fitness for a particular purpose) is limited to providing replacement parts during the term of this warranty. Some jurisdictions do not allow limitations on how long an implied warranty lasts, so this

limitation may not apply to you. There are no rights, warranties or conditions, expressed or implied, statutory or otherwise, other than those contained in this warranty.

Roberts-Gordon LLC shall in no event be responsible for incidental or consequential damages or incur liability for damages in excess of the amount paid by you for the ROBERTS GORDON® GORDONGLO™ ELITE ELECTRIC HEATER GGEL. Some jurisdictions do not allow the exclusion or limitation of incidental or consequential damages, so this limitation or exclusion may not apply to you. This warranty gives you specific legal rights, and you may also have other rights which vary from jurisdiction to jurisdiction.

Roberts-Gordon LLC shall not be responsible for failure to perform under the terms of this warranty if caused by circumstances out of its control, including but not limited to war, fire, flood, strike, government or court orders, acts of God, terrorism, unavailability of supplies, parts or power. No person is authorized to assume for Roberts-Gordon LLC any other warranty, obligation or liability.

LIMITATIONS ON AUTHORITY OF REPRESENTATIVES:
No representative of Roberts-Gordon LLC, other than an Executive Officer, has authority to change or extend these provisions. Changes or extensions shall be binding only if confirmed in writing by Roberts-Gordon LLC's duly authorized Executive Officer.

Manual Revision: A1: 2026-01-30